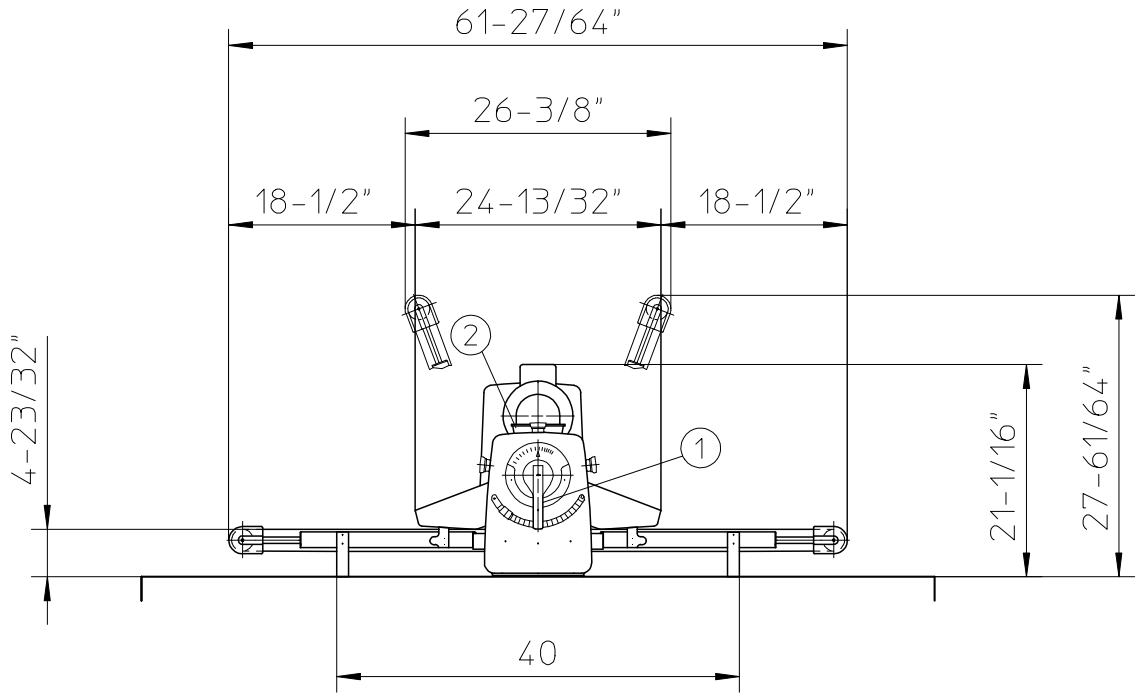

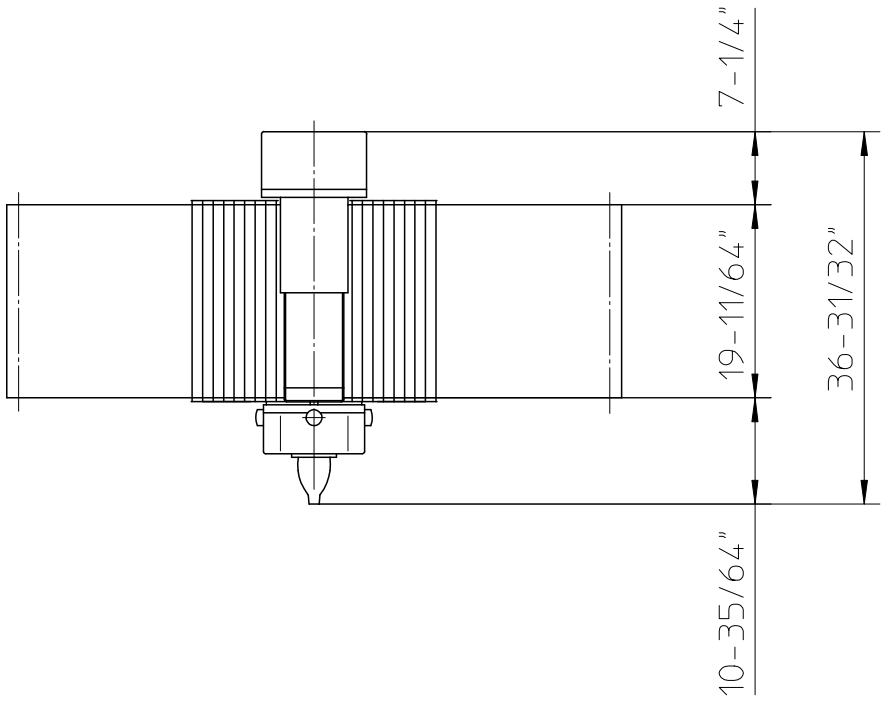

1. Roller gap adjustment
2. Flour tank

Design and dimensions subject
to change without notice

STM513 Econom	Maßstab 1:20		Datum	Name
		Gez.	03.06.09	at
		Gepr.	03.06.09	at
RONDO Burgdorf AG, CH–3400 Burgdorf RONDO		142565		